Fig. 42: Power Distribution Circuit (2 of 5)

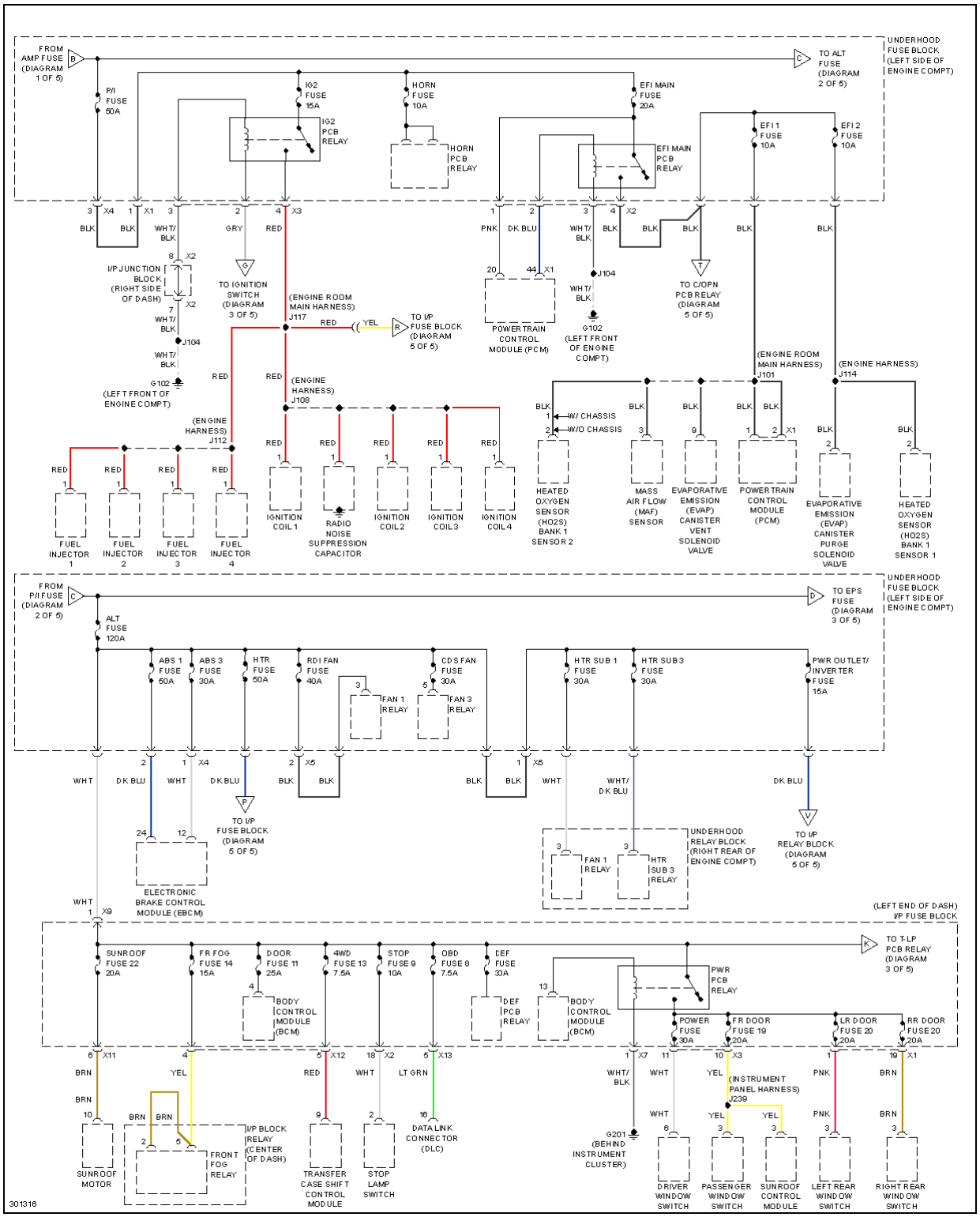

© 2006 Mitchell Repair Information Company, LLC.