Engine Control

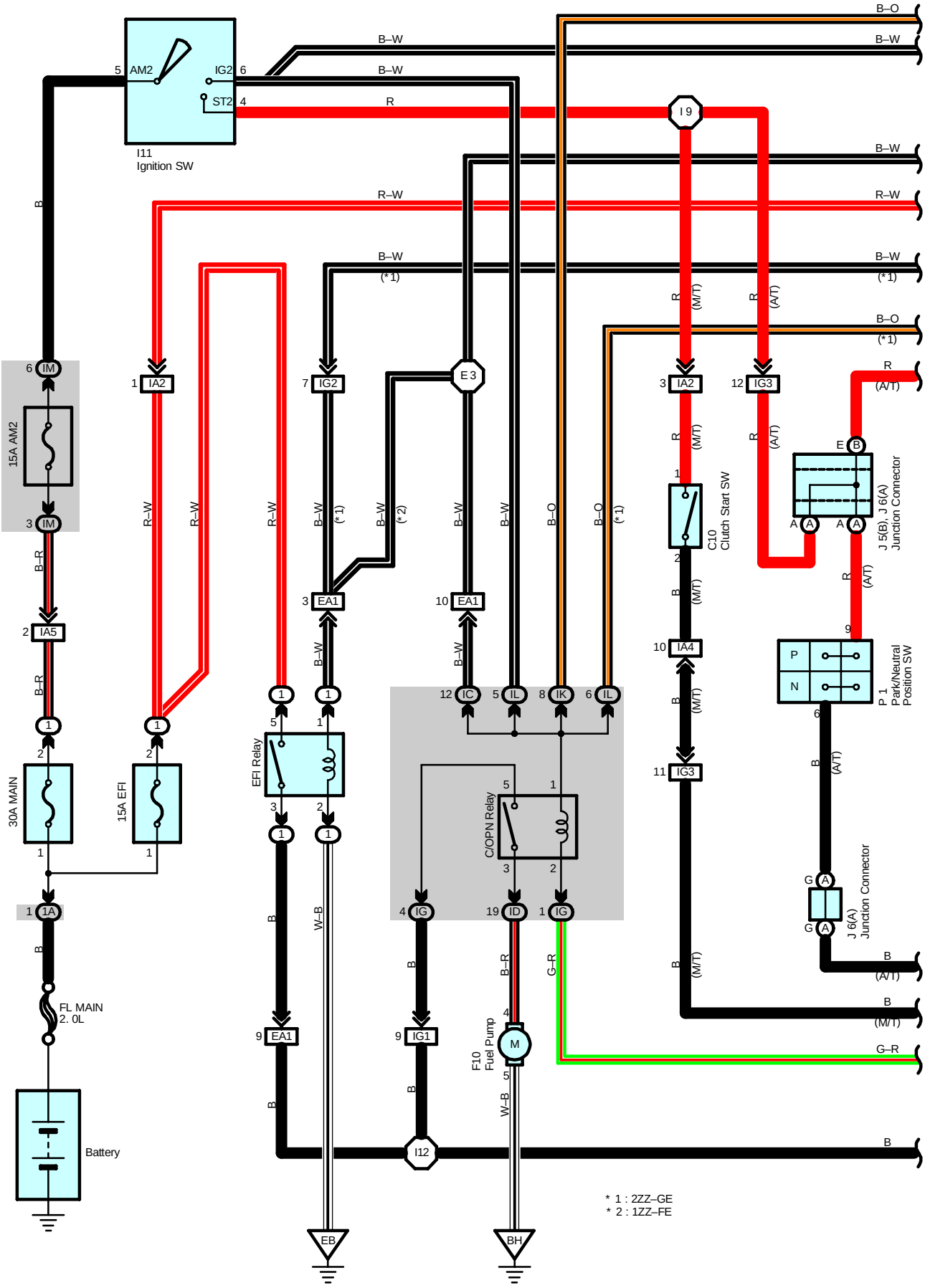

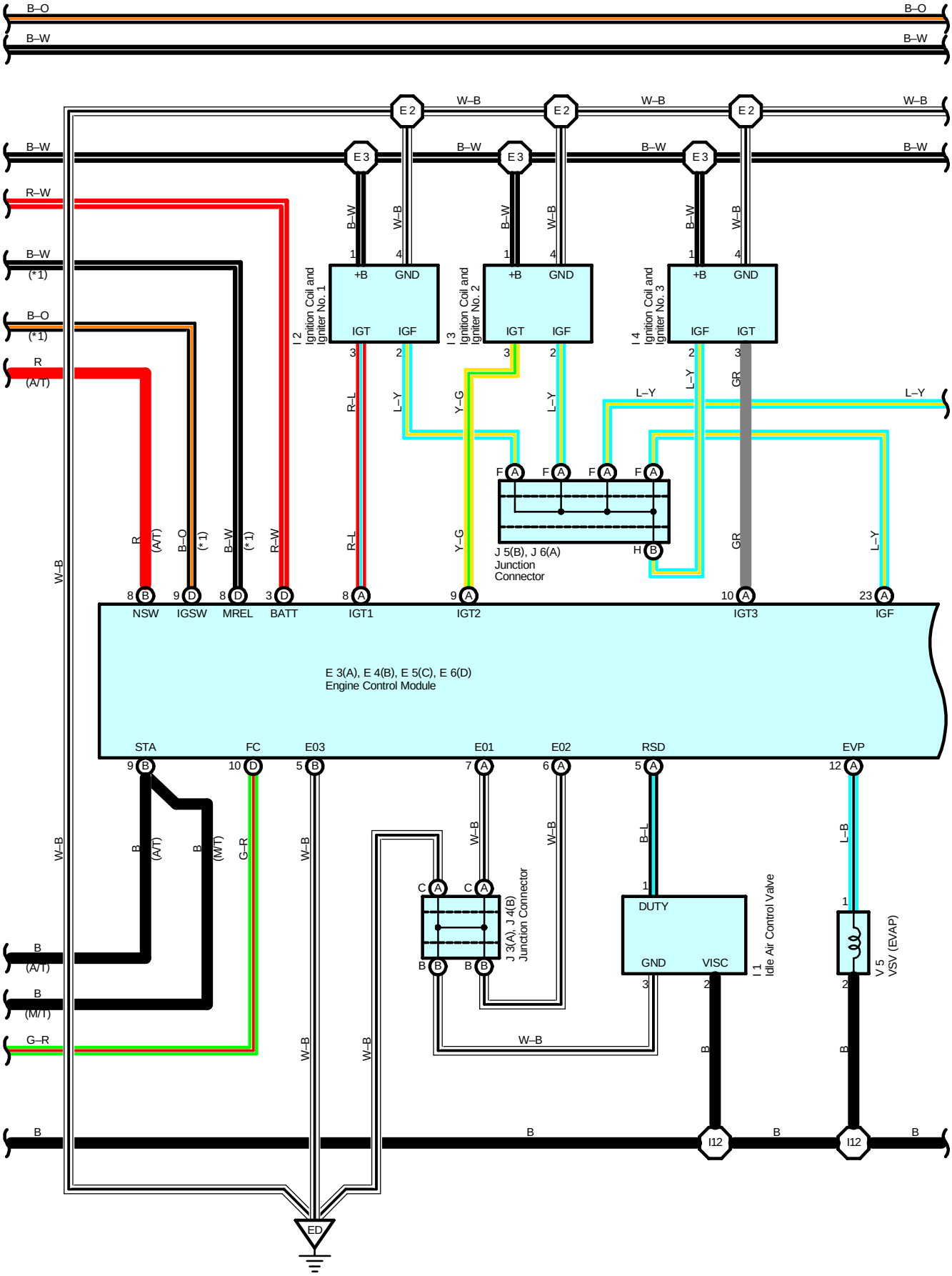
B–O
B–W
E 2
E 3
W–B
R–W
(*1)
R
(A/T)
I 2
Ignition Coil and
Igniter No. 1
I 3
Ignition Coil and
Igniter No. 2
I 4
Ignition Coil and
Igniter No. 3
+B
GND
IGT
IGF
R–L
L–Y
Y–G
GR
J 5(B), J 6(A)
Junction
Connector
NSW
IGSW
MREL
BATT
IGT1
IGT2
IGT3
E 3(A), E 4(B), E 5(C), E 6(D)
Engine Control Module
STA
FC
E03
E01
E02
RSD
EVP
B–L
L–B
G–R
B
(M/T)
J 3(A), J 4(B)
Junction Connector
DUTY
GND
VISC
I 1
Idle Air Control Valve
V 5
VSV (EVAP)
I12
ED

Engine Control

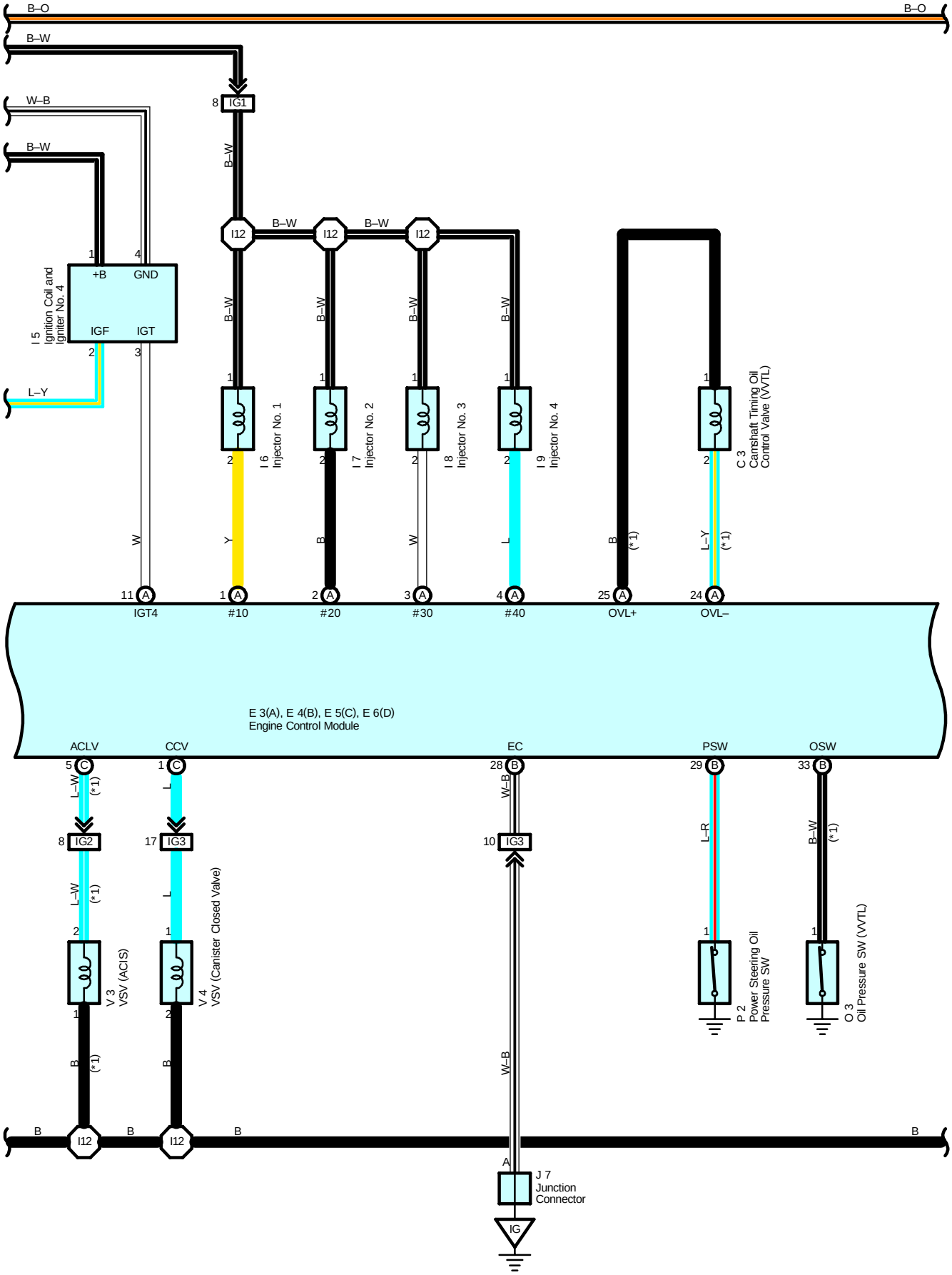

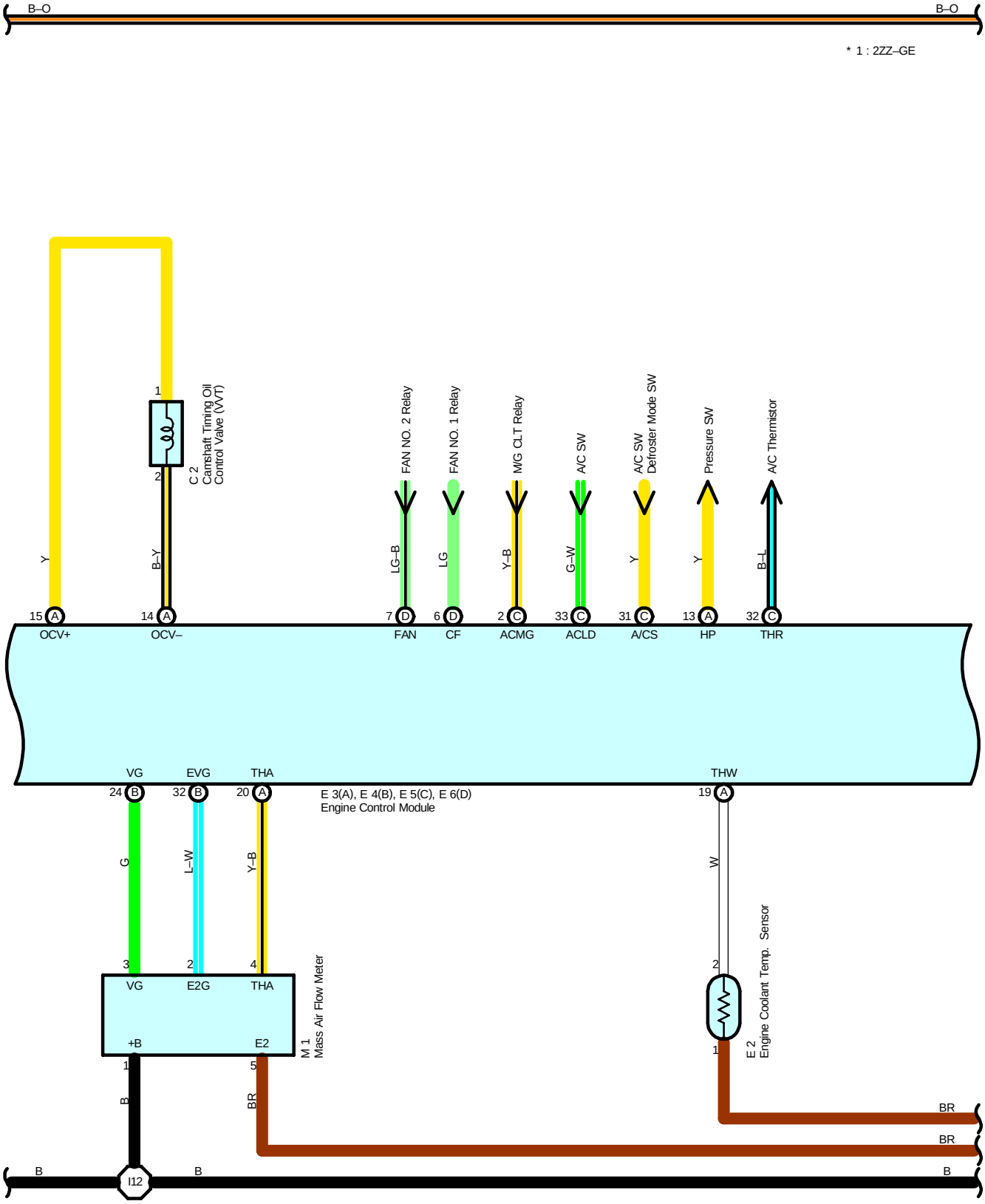
B–O
B–O
* 1 : 2ZZ–GE
C 2
Camshaft Timing Oil Control Valve (VVT)
FAN NO. 2 Relay
FAN NO. 1 Relay
M/G CLT Relay
A/C SW
A/C SW Defroster Mode SW
Pressure SW
A/C Thermistor
Y
B–Y
LG–B
LG
Y–B
G–W
Y
Y
B–L
15 A OCV+
14 A OCV–
7 D FAN
6 D CF
2 C ACMG
33 C ACLD
31 C A/CS
13 A HP
32 C THR
VG
EVG
THA
THW
24 B
32 B
20 A
19 A
E 3(A), E 4(B), E 5(C), E 6(D)
Engine Control Module
G
L–W
Y–B
W
3 VG
2 E2G
4 THA
+B
E2
1
5
M 1
Mass Air Flow Meter
2
1
E 2
Engine Coolant Temp. Sensor
B
BR
BR
BR
B
B
B
I12

Engine Control

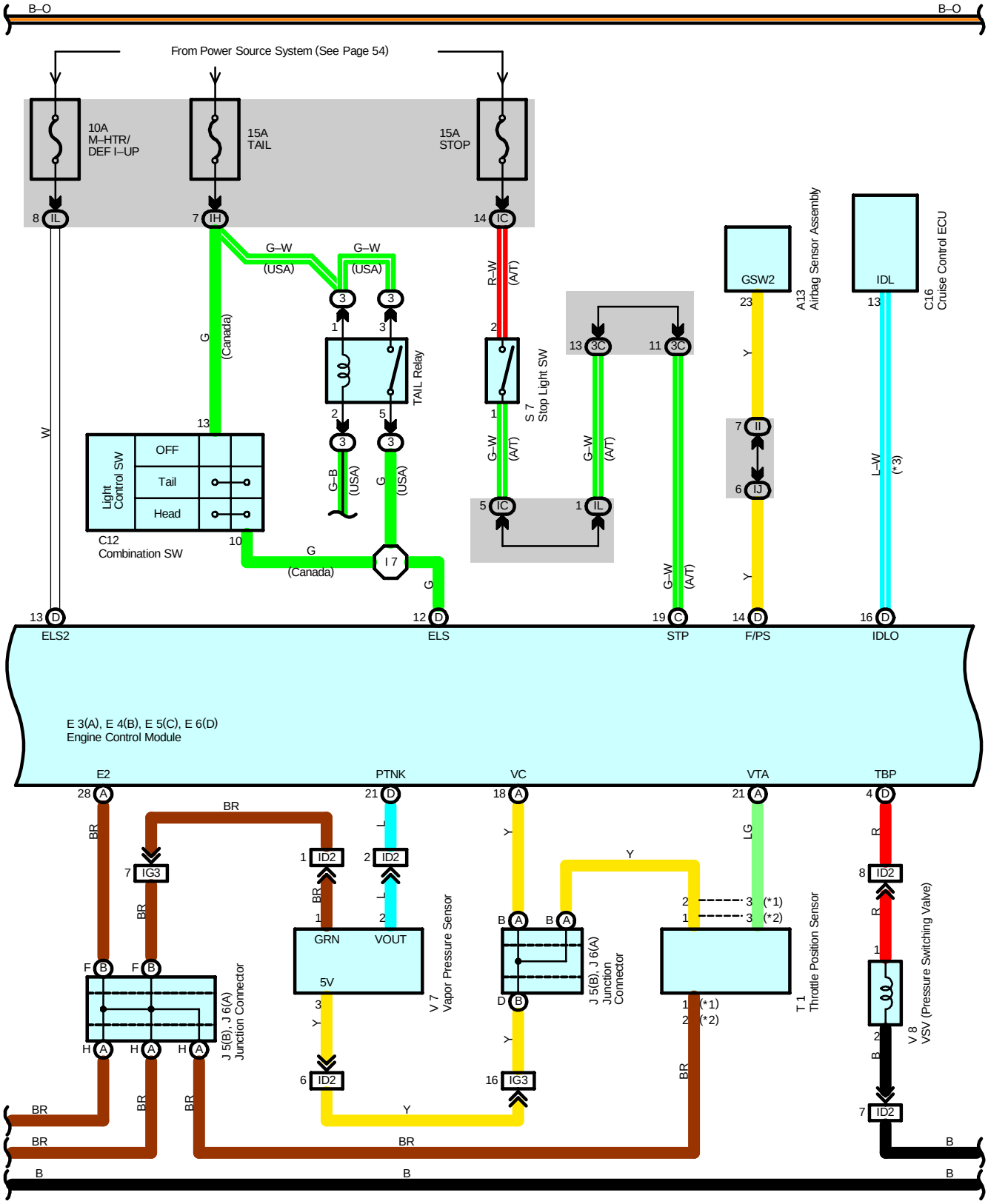

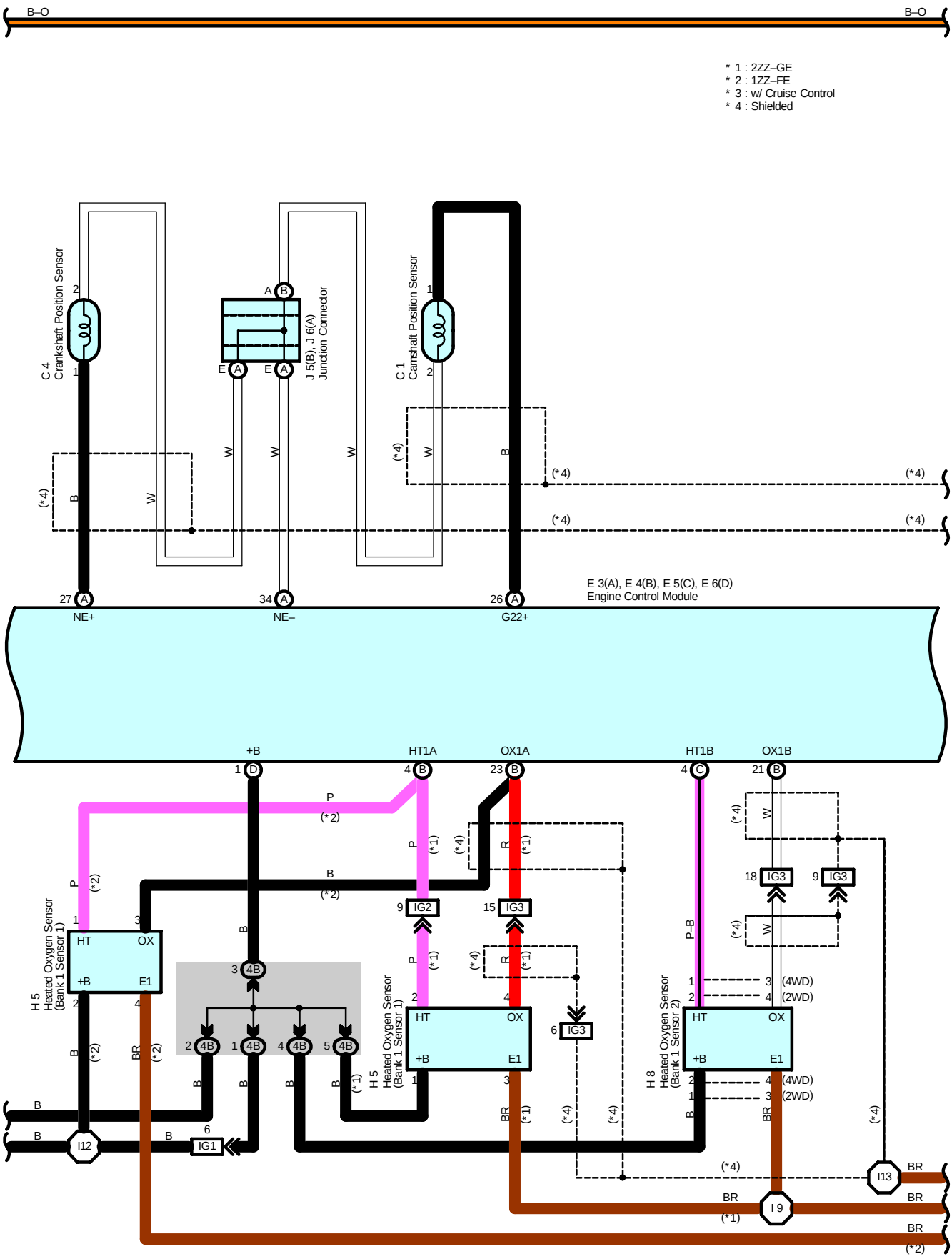
B–O
B–O
* 1 : 2ZZ–GE
* 2 : 1ZZ–FE
* 3 : w/ Cruise Control
* 4 : Shielded
C 4
Crankshaft Position Sensor
J 5(B), J 6(A)
Junction Connector
C 1
Camshaft Position Sensor
E 3(A), E 4(B), E 5(C), E 6(D)
Engine Control Module
NE+
NE–
G22+
+B
HT1A
OX1A
HT1B
OX1B
H 5
Heated Oxygen Sensor
(Bank 1 Sensor 1)
H 5
Heated Oxygen Sensor
(Bank 1 Sensor 1)
H 8
Heated Oxygen Sensor
(Bank 1 Sensor 2)
HT
OX
+B
E1
IG1
IG2
IG3
I12
I 9
I13
(4WD)
(2WD)

Engine Control

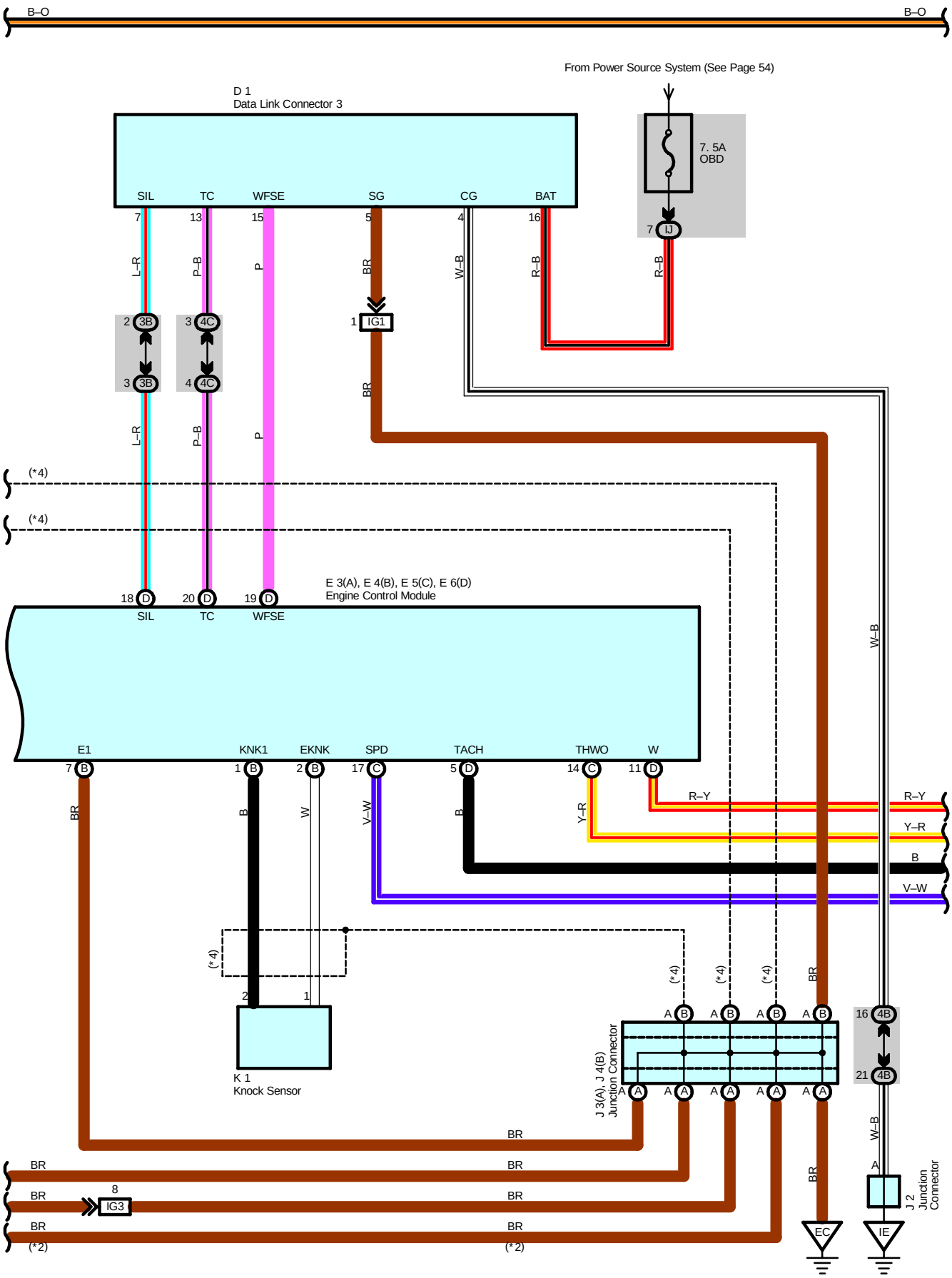

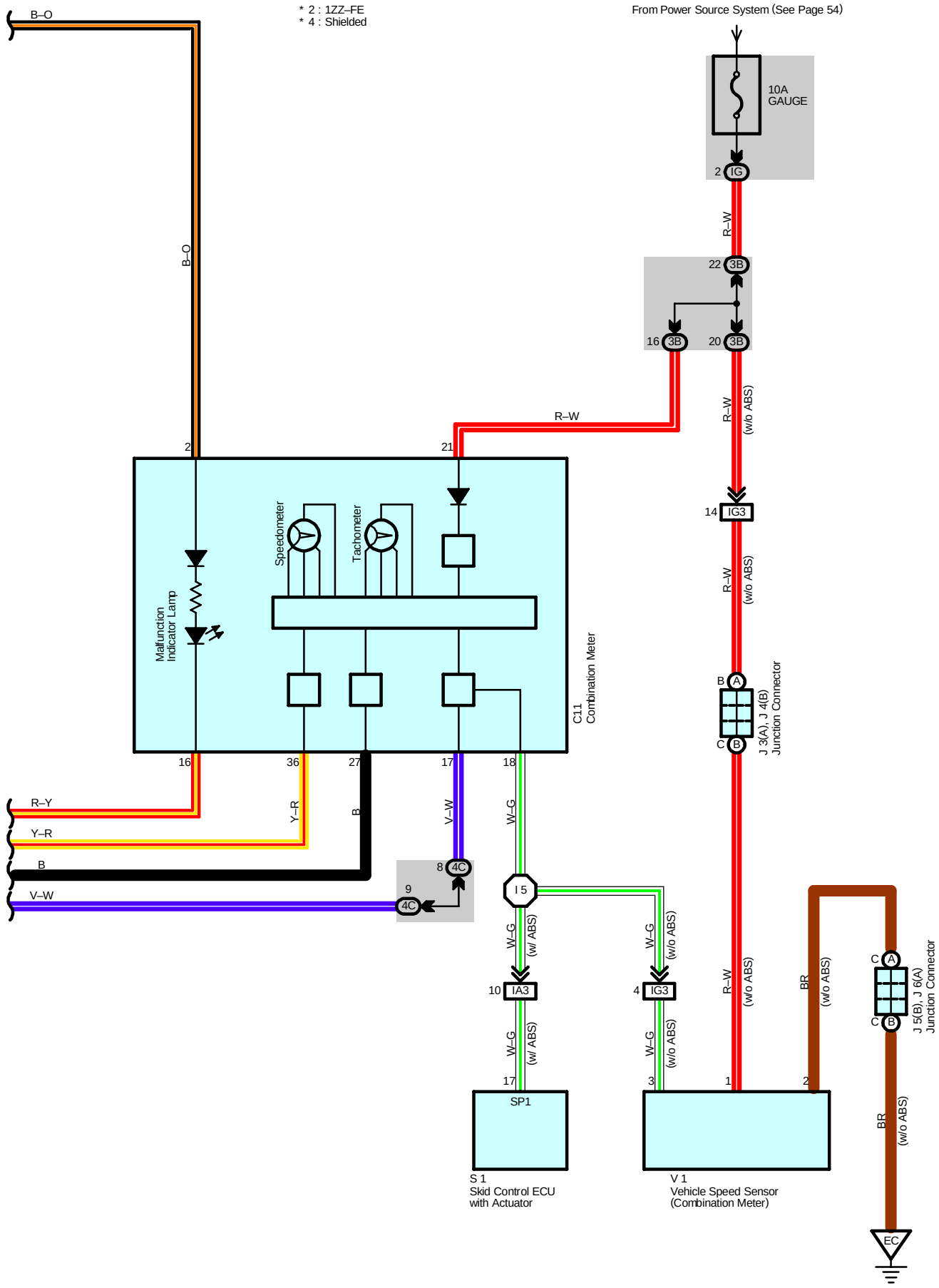
* 2 : 1ZZ–FE
* 4 : Shielded
From Power Source System (See Page 54)
B–O
10A
GAUGE
2 IG
R–W
22 3B
16 3B
20 3B
R–W
(w/o ABS)
R–W
2
21
14 IG3
R–W
(w/o ABS)
Speedometer
Tachometer
Malfunction
Indicator Lamp
C11
Combination Meter
B A
C B
J 3(A), J 4(B)
Junction Connector
16
36
27
17
18
R–Y
Y–R
B
V–W
Y–R
B
V–W
W–G
8 4C
9 4C
I 5
W–G
(w/ ABS)
W–G
(w/o ABS)
10 IA3
4 IG3
R–W
(w/o ABS)
BR
(w/o ABS)
C A
C B
J 5(B), J 6(A)
Junction Connector
W–G
(w/ ABS)
W–G
(w/o ABS)
17
3
1
2
SP1
BR
(w/o ABS)
S 1
Skid Control ECU
with Actuator
V 1
Vehicle Speed Sensor
(Combination Meter)
EC

System Outline

The engine control system utilizes a microcomputer and maintains overall control of the engine, etc. An outline of engine control is given here.

1. Input Signals

(1) Engine coolant temp. signal system

The engine coolant temp. sensor detects the engine coolant temp. and has a built–in thermistor with a resistance which varies according to the engine coolant temp. Thus the engine coolant temp. is input as a control signal to TERMINAL THW of the engine control module.

(2) Intake air temp. signal system

The intake air temp. sensor is installed in the mass air flow meter and detects the intake air temp., which is input as a control signal to TERMINAL THA of the engine control module.

(3) Power steering oil pressure signal system

Power steering oil pressure is detected by the power steering oil pressure SW and is input as a control signal to TERMINAL PSW of the engine control module.

(4) RPM signal system

Camshaft position and crankshaft position are detected by the camshaft position sensor and crankshaft position sensor. Camshaft position is input as a control signal to TERMINAL G22+ (2ZZ–GE) or G2+ (1ZZ–FE) of the engine control module, and engine RPM is input into TERMINAL NE+.

(5) Throttle signal system

The throttle position sensor detects the throttle valve opening angle, which is input as a control signal to TERMINAL VTA of the engine control module.

(6) Vehicle speed signal system

The vehicle speed is detected by the ABS speed sensor and the signal is input to TERMINAL SPD of the engine control module via the comb. meter and the skid control ECU with actuator. (w/ ABS)

The vehicle speed is detected by the vehicle speed sensor installed in the transaxle and the signal is input to TERMINAL SPD of the engine control module via the comb. meter. (w/o ABS)

(7) NSW signal system (A/T)

The Park/Neutral position SW detects whether the shift position is in neutral or not, and inputs a control signal to TERMINAL NSW of the engine control module.

(8) A/C SW signal system

The operating voltage of the A/C SW is detected and is input as a control signal to TERMINAL A/CS of the engine control module.

(9) Battery signal system

Voltage is constantly applied to TERMINAL BATT of the engine control module. When the ignition SW is turned to on, voltage for engine control module operation is applied via the EFI relay to TERMINAL +B of the engine control module.

(10) Intake air volume signal system

Intake air volume is detected by the mass air flow meter, and is input as a control signal to TERMINAL VG of the engine control module.

(11) STA signal system

To confirm that the engine is cranking, the voltage applied to the starter motor during cranking is detected and is input as a control signal to TERMINAL STA of the engine control module.

(12) Oxygen sensor signal system

The oxygen density in the exhaust gases is detected and is input as a control signal into TERMINALS OX1A and OX1B of the engine control module. To maintain stable detection performance by the oxygen sensor, a heater is used for warming the sensor. The heater is also controlled by the engine control module (HT1A and HT1B).

(13) Engine knock signal system

Engine knocking is detected by the knock sensor and input as a control signal to TERMINAL KNK1 of the engine control module.

(14) Electrical load signal system

When systems which cause a high electrical load such as the rear window defogger, taillight are turned on, a signal is input to TERMINALS ELS and ELS2 as a control signal.

(15) Vapor pressure signal system

Vapor pressure is detected by the vapor pressure sensor and is input as a control signal to TERMINAL PTNK of the engine control module.

2. Control System

∗ SFI system

The SFI system monitors the engine conditions through the signals, which are input from each sensor to the engine control module. Based on this data and the program memorized in the engine control module, the most appropriate fuel injection timing is decided and current is output to TERMINALS #10, #20, #30 and #40 of the engine control module, operating the injectors (to inject fuel). This is the system which finely controls the fuel injection in response to the driving conditions, through the engine control module.

∗ ESA system

The ESA system monitors the engine conditions using the signals, which are input to the engine control module from each sensor. Based on this data and the program memorized in the engine control module, the most appropriate ignition timing is decided and current is output to TERMINALS IGT1, IGT2, IGT3 and IGT4 of the engine control module. This output controls the ignition coil and igniter No. 1 , No. 2 , No. 3 and No. 4 to produce the most appropriate ignition timing for the driving conditions.

∗ IAC system

The IAC system increases the RPM and provides idle stability for fast idle–up when the engine is cold, and when the idle speed has dropped due to electrical load and so on. The engine control module evaluates the signals from each sensor, and outputs current to TERMINAL RSD to control the idle air control valve.

∗ Knock control system

Knock control system controls the gate based on the engine rotation speed and detects knocking by the peak value of the knock sensor output during the gate open period, and then controls it to the most suitable ignition timing in proportion to the driving condition.

∗ Evapoparge control system

This system leads the vapor stuck to the canister to the serge tank in order not to agitate the air fuel by adjusting the fuel injection volume.

The signal at this time will be output from TERMINAL EVP of the engine control module to VSV (EVAP).

3. Diagnosis System

With the diagnosis system, when there is a malfunctioning in the engine control module signal system,the malfunction system is recorded in the memory. The malfunctioning system can be found by reading the display (Code) of the malfunction indicator lamp.

4. Fail–Safe System

When a malfunction occurs in any system, if there is a possibility of engine trouble being caused by continued control based on the signals from that system, the fail–safe system either controls the system by using the data (Standard values) recorded in the engine control module memory or else stops the engine.

Service Hints

C/OPN Relay

5–3 : Closed with the starter running and the engine running

EFI Relay

5–3 : Closed with the ignition SW at ON or ST position

E2 Engine Coolant Temp. Sensor

1–2 : Approx. 15.04 kΩ (–20˚C, –4˚F)
Approx. 5.74 kΩ (0˚C, 32˚F)
Approx. 2.45 kΩ (20˚C, 68˚F)
Approx. 0.318 kΩ (80˚C, 176˚F)

E3 (A), E4 (B), E5 (C), E6 (D) Engine Control Module

Voltage at engine control module wiring connectors

+B–E1 : 9–14 volts (Ignition SW at ON position)
VC–E1 : 4.5–5.5 volts (Ignition SW at ON position)
VTA–E1 : 0.3–0.8 volts (Ignition SW on and throttle valve fully closed)
: 3.2–4.9 volts (Ignition SW on and throttle valve fully open)
EVG–E1 : 3.3–3.9 volts (Ignition SW at ON position)
THA–E1 : 0.5–3.4 volts (Engine idling and intake air temp. 0–80˚C, 32–176˚F)
THW–E1 : 0.2–1.0 volts (Engine idling and engine coolant temp. 60–120˚C, 140–248˚F)
STA–E1 : 6–14 volts (Engine cranking)
IGT1, IGT2, IGT3, IGT4–E1 : Pulse generation (Engine idling)
IGF–E1 : Pulse generation (Engine idling)
FC–E1 : 9–14 volts (Ignition SW on and engine stopping)
0–3 volts (Engine idling)
W–E1 : 9–14 volts (Engine idling and warning light off)
A/CS–E1 : 9–14 volts (Ignition SW on and A/C SW off)
SPD–E1 : Pulse generation (Driving approx. 20 km/h)
ELS–E1 : 7.5–14 volts (Ignition SW on and taillight on)
ELS2–E1 : 7.5–14 volts (Ignition SW on and rear window defogger on)
NSW–E1 : 0–3 volts (Engine cranking)
#10, #20, #30, #40–E1 : Pulse generation (Engine idling)
NE+ –NE– : Pulse generation (Engine idling)
RSD–E1 : Pulse generation (Engine idling)
G22+ –NE– : Pulse generation (Engine idling)
TBP–E1 : 9.0–14.0 volts (Ignition SW at ON position)
PTNK–E1 : 3.0–3.6 volts (Ignition SW at ON position and remove fuel cap)
OX1A, OX1B–E1 : Pulse generation (Maintain engine speed at 2500 rpm for two minutes after warming up.)
HT1A, HT1B–E1 : 9.0–14.0 volts (Ignition SW at ON position)
0–3.0 volts (Engine idling)
KNK1–E1 : Pulse generation (Engine idling)
EVP–E1 : 9.0–14.0 volts (Ignition SW at ON position)
TACH–E1 : Pulse generation (Engine idling)

○ : Parts Location

Code	See Page	Code	See Page	Code	See Page
A13	38	I1	37 (1ZZ–FE)	K1	35 (2ZZ–GE)
C1	34 (2ZZ–GE)	I2	35 (2ZZ–GE)		37 (1ZZ–FE)
	36 (1ZZ–FE)		37 (1ZZ–FE)	M1	35 (2ZZ–GE)
C2	34 (2ZZ–GE)	I3	35 (2ZZ–GE)		37 (1ZZ–FE)
	36 (1ZZ–FE)		37 (1ZZ–FE)	O3	35 (2ZZ–GE)
C3	34 (2ZZ–GE)	I4	35 (2ZZ–GE)	P1	35 (2ZZ–GE)
C4	34 (2ZZ–GE)		37 (1ZZ–FE)		37 (1ZZ–FE)
	36 (1ZZ–FE)	I5	35 (2ZZ–GE)	P2	35 (2ZZ–GE)
C10	38		37 (1ZZ–FE)		37 (1ZZ–FE)
C11	38	I6	35 (2ZZ–GE)	S1	35 (2ZZ–GE)
C12	38		37 (1ZZ–FE)		37 (1ZZ–FE)
C16	38	I7	35 (2ZZ–GE)	S7	39
D1	38		37 (1ZZ–FE)	T1	35 (2ZZ–GE)
E2	34 (2ZZ–GE)	I8	35 (2ZZ–GE)		37 (1ZZ–FE)
	36 (1ZZ–FE)		37 (1ZZ–FE)	V1	37 (1ZZ–FE)
E3 A	38	I9	35 (2ZZ–GE)	V3	35 (2ZZ–GE)
E4 B	38		37 (1ZZ–FE)	V4	35 (2ZZ–GE)
E5 C	38	I11	39		37 (1ZZ–FE)
E6 D	38	J2	39	V5	35 (2ZZ–GE)
F10	40	J3 A	39		37 (1ZZ–FE)
H5	36 (1ZZ–FE)	J4 B	39	V7	41
	39 (2ZZ–GE)	J5 B	39	V8	41
H8	39	J6 A	39		
I1	35 (2ZZ–GE)	J7	39		

: Relay Blocks

Code	See Page	Relay Blocks (Relay Block Location)
1	23	Engine Room R/B (Engine Compartment Left)
3	28	RH R/B (Right Side of the Instrument Panel Reinforcement)

: Junction Block and Wire Harness Connector

Code	See Page	Junction Block and Wire Harness (Connector Location)
IC	25	Engine Room Main Wire and Instrument Panel J/B (Lower Finish Panel)
ID	25	Floor Wire and Instrument Panel J/B (Lower Finish Panel)
IG	25	Instrument Panel Wire and Instrument Panel J/B (Lower Finish Panel)
IH		
II		
IJ		
IK	24	
IL		
IM		
1A	23	Engine Wire and Engine Room J/B (Engine Compartment Left)
3B	29	Instrument Panel Wire and RH J/B (Right Side of the Instrument Panel Reinforcement)
3C		
4B	32	Instrument Panel Wire and Center J/B (Behind the Combination Meter)
4C		

: **Connector Joining Wire Harness and Wire Harness**

Code	See Page	Joining Wire Harness and Wire Harness (Connector Location)
EA1	42 (2ZZ–GE)	Engine Wire and Engine Room Main Wire (Inside of the Engine Room R/B)
	44 (1ZZ–FE)	
IA2	46	Engine Room Main Wire and Instrument Panel Wire (Instrument Panel Reinforcement LH)
IA3		
IA4		
IA5		
ID2	46	Instrument Panel Wire and Floor Wire (Left Kick Panel)
IG1	48	Engine Wire and Instrument Panel Wire (Blower Unit RH)
IG2		
IG3		

: **Ground Points**

Code	See Page	Ground Points Location
EB	42 (2ZZ–GE)	Front Left Suspension Tower
	44 (1ZZ–FE)	
EC	42 (2ZZ–GE)	Left Side of the Cylinder Head
	44 (1ZZ–FE)	
ED	42 (2ZZ–GE)	
	44 (1ZZ–FE)	
IE	46	Behind Combination Meter
IG	46	Right Kick Panel
BH	50	Left Quarter Panel

: **Splice Points**

Code	See Page	Wire Harness with Splice Points	Code	See Page	Wire Harness with Splice Points
E2	42 (2ZZ–GE)	Engine Wire	I7	48	Instrument Panel Wire
	44 (1ZZ–FE)		I9		
E3	42 (2ZZ–GE)		I12	48	Engine Wire
	44 (1ZZ–FE)		I13		
I5	48	Instrument Panel Wire			